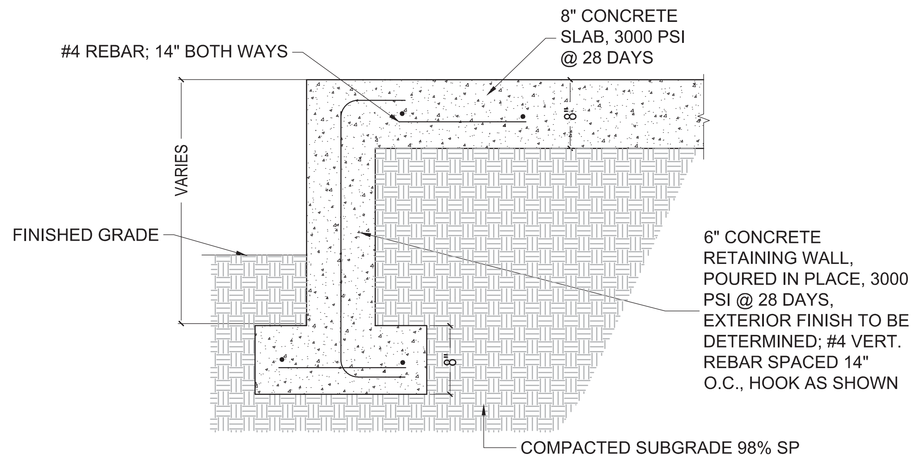

CAST IN PLACE RETAINING WALL (LESS THAN 30" HIGH)
(NOT TO SCALE)

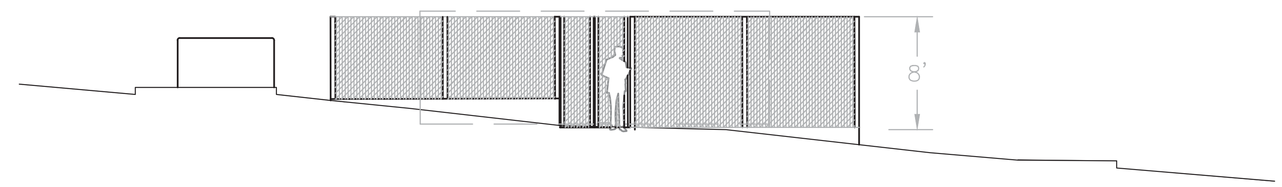

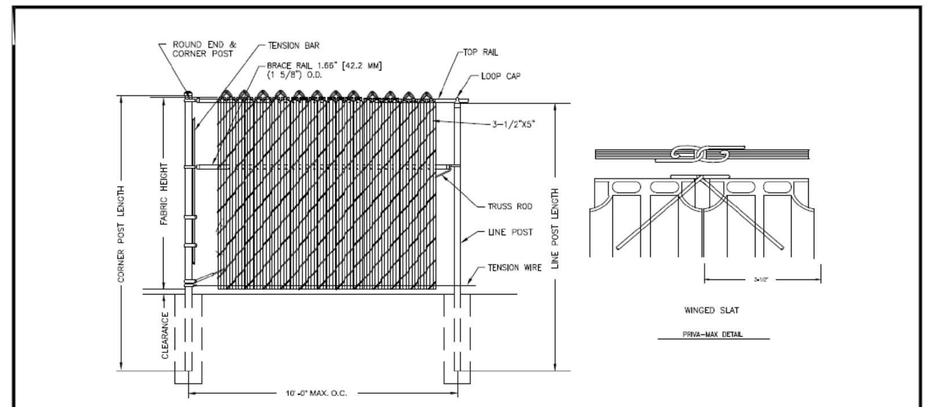

TYPICAL FENCE ELEVATION / SECTION

TOP RAIL / TRUSSED BRACE RAIL
BOTTOM TENSION WIRE

NOTES:
1. DESIGN AND SPECIFICATION SUBJECT TO CHANGE.
2. BRACE RAILS REQUIRED WHEN PRIVA - MAX FENCE HEIGHT EXCEEDS 6'.
3. STANDARD FABRIC IS 9 GA. WITH 1.2 OZ. GBW COATING.
4. FOOTING AND POSTS AS REQUIRED BY SITE CONDITIONS & CODES.

Merchants Metals®
the first name in fence solutions

CHAIN LINK PRIVA - MAX TYPICAL FENCE ELEVATION / SECTION		
BY: ART 8.24.07	SCALE: NTS	DWG #: CLPM10
WWW.MerchantsMetals.com		COPYRIGHT ©

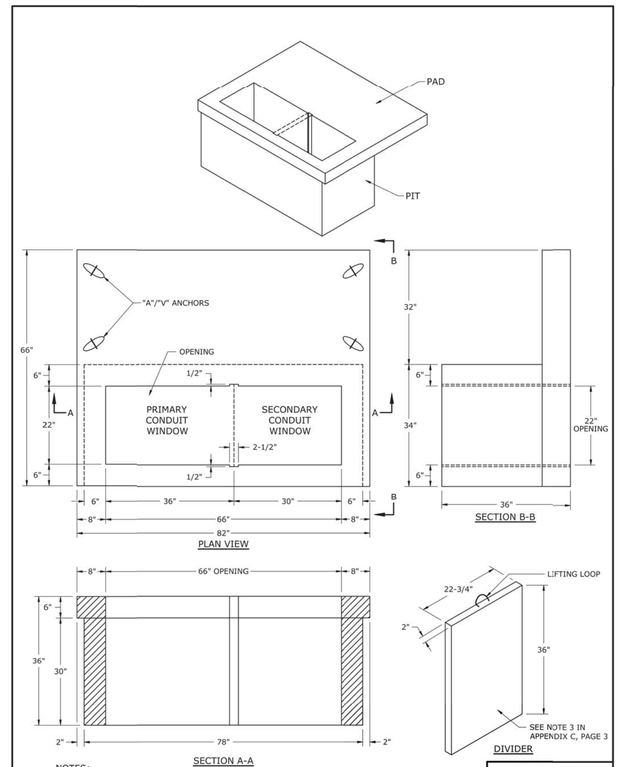

NOTES:
1. SEE APPENDIX C, PAGE 3 FOR NOTES.

REVISED	BY	CHK'D	APPR.
3			
2			
1	8/25/19	PARRISH	VALENTIN
0	3/16/19	SHARP	SHARP

SMALL PIT PAD FOR THREE-PHASE PAD-MOUNTED TRANSFORMERS

DUKE ENERGY.

DEC	DEM	DEP	DEF
X		X	

APPENDIX C - PAGE 1

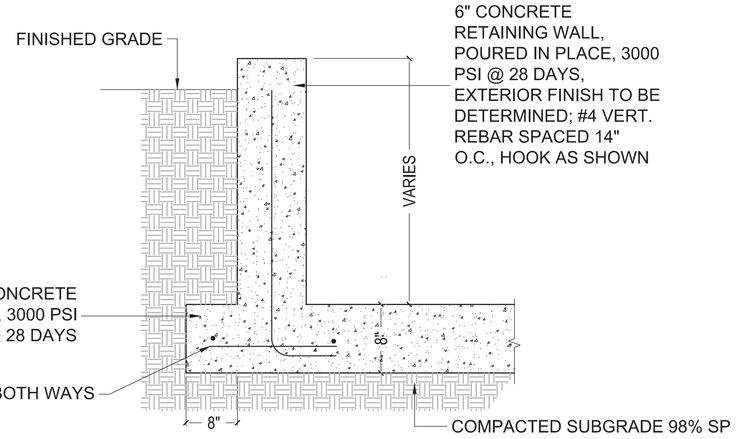

CAST IN PLACE RETAINING WALL (LESS THAN 30" HIGH)
(NOT TO SCALE)

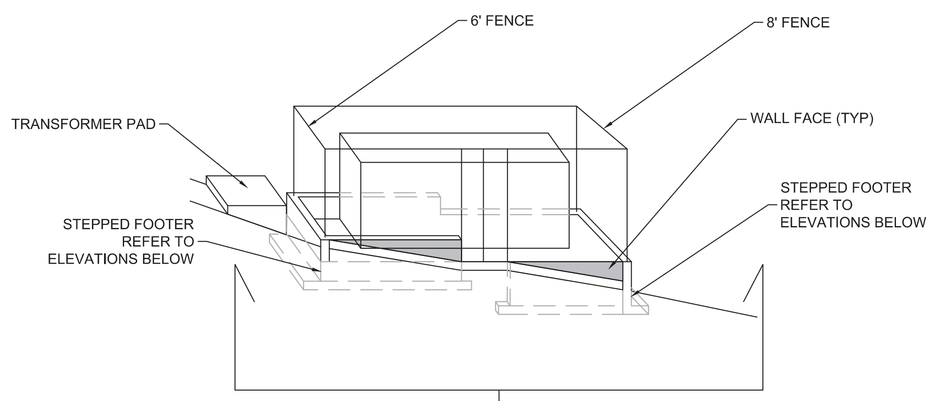

NOTES:
1. ALTERNATE UPSLOPE SECTION TO BE USED ONLY WHEN DRAINING AWAY FROM CURB.
2. UNLESS OTHERWISE SHOWN ON DRAWINGS, LOCATE CONTROL JOINTS AT 10' INTERVALS AND EXPANSION JOINTS AT 30' INTERVALS. WHERE CURB IS ADJACENT TO CONCRETE WALK, JOINTS SHALL COINCIDE. SEE SPECIFICATIONS FOR ADDITIONAL INFORMATION.

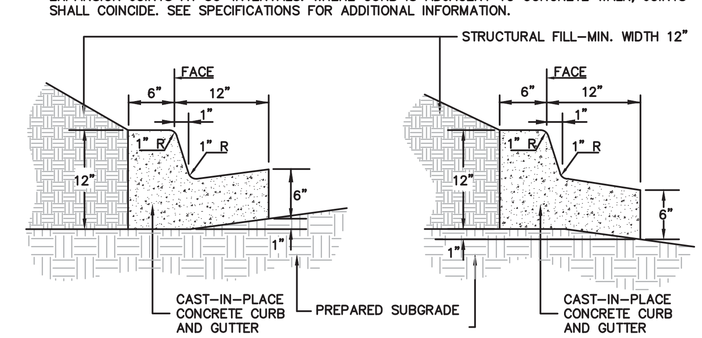

18" STRAIGHT CURB AND GUTTER
(NOT TO SCALE)

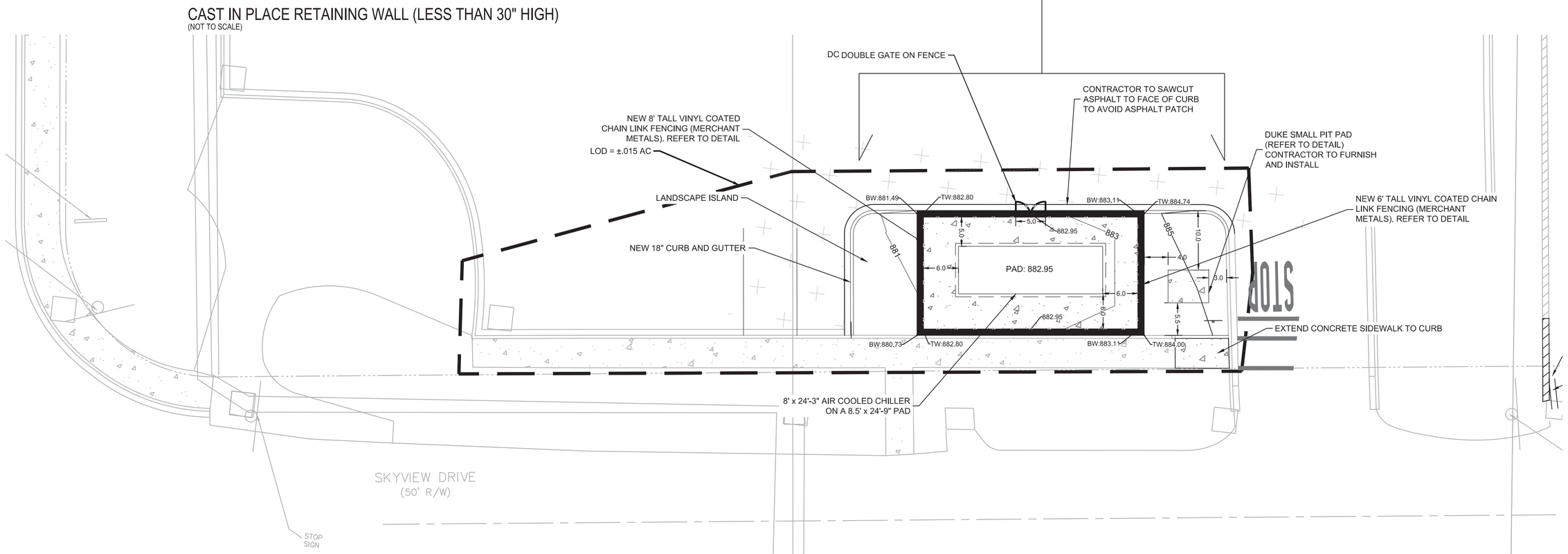

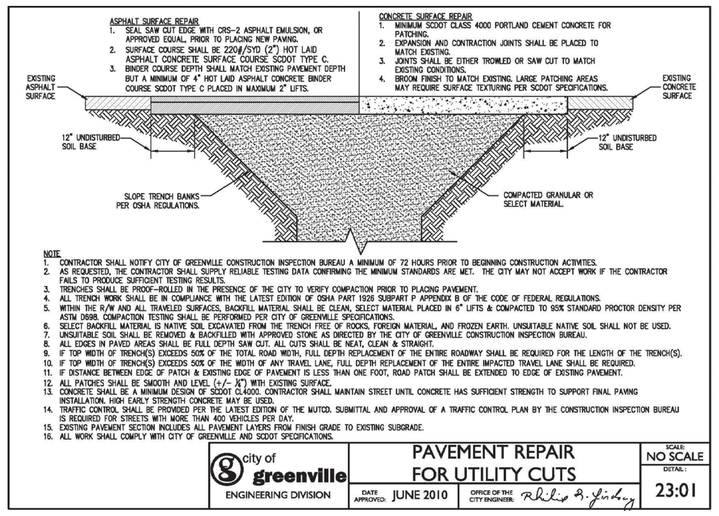

PAVEMENT REPAIR DETAIL
(NOT TO SCALE)

0 20 40 80
SCALE: 1" = 40'

811
Know what's below.
Call before you dig.

SURVEY NOTE:
EXISTING ELEVATIONS BASED ON TOPOGRAPHIC SURVEY BY FREELAND & ASSOCIATES, INC. DATED JUNE 12, 2019.

SCALE: 1"=40'

CRAIG GAULDEN DAVIS
Architecture
Planning
Interiors
19 Washington Park
Greenville, SC 29601
Phone 864.242.0761
Fax 864.501.9945
E-mail cgd@cgdarch.com

COPYRIGHT © 2020 CRAIG GAULDEN & DAVIS, INC. ALL RIGHTS RESERVED

THIS COPYRIGHTED DOCUMENT AND ALL INFORMATION CONTAINED HEREIN IS AN INSTRUMENT OF SERVICE AND SHALL NOT BE REPRODUCED, ALTERED, OR REUSED IN PART OR IN WHOLE WITHOUT PRIOR WRITTEN PERMISSION FROM THE ARCHITECT. THIS DRAWING IS THE EXCLUSIVE PROPERTY OF THE ARCHITECT AND MUST BE RETURNED UPON REQUEST.

SOUTH CAROLINA SEAMON, WHITESIDE & ASSOCIATES, INC. No. C00472 CERTIFICATE OF AUTHORIZATION

SOUTH CAROLINA PROFESSIONAL ENGINEER No. 28155 JOHN W. BRYANT

CONSULTANT

SEAMON WHITESIDE
MOUNT PLEASANT, SC 843.884.1667
GREENVILLE, SC 864.298.0534
SUMMERVILLE, SC 843.972.0710
SPARTANBURG, SC 864.272.1272
CHARLOTTE, NC 980.312.5450
WWW.SEAMONWHITESIDE.COM

506 S. PLEASANTBURG DRIVE, GREENVILLE, SC 29607

GREENVILLE - BLDG. 112 AIR COOLED CHILLER ADDITION

Project No.: H59-N054-FW

DATE	MARK	DESCRIPTION
3/1/21		PAVING DETAILS, FENCE CLARIFICATION

ISSUE:	CONSTRUCTION
	01/15/2021
PROJECT NO:	20033
DRAWN BY:	HED
CHECKED BY:	SEP

SITE PLAN

C4.0